177 - (PD250JC5N)

-

Dough 5x50gr in jars 5 neon colors, in carton box ,250 gr
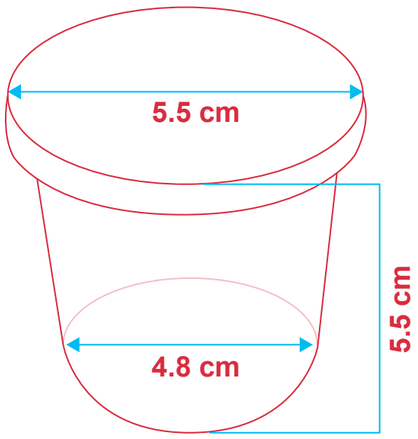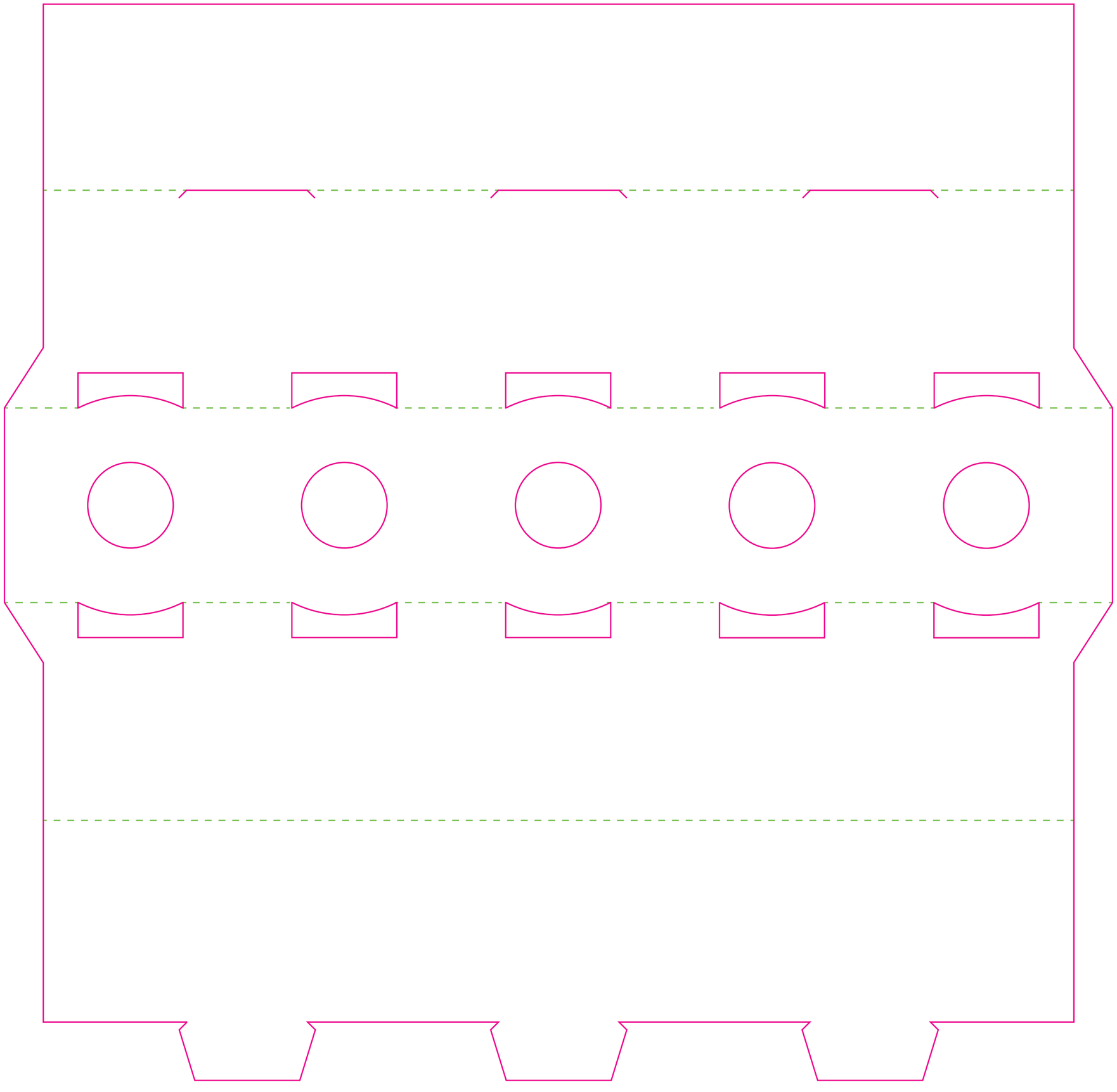
Jar (50g):