186-(PD600JC4)

-

Dough 4x150gr in jars 4 colors, in carton box ,600 gr
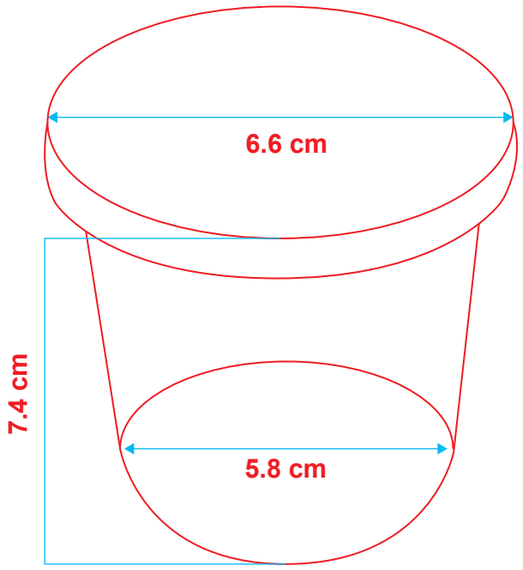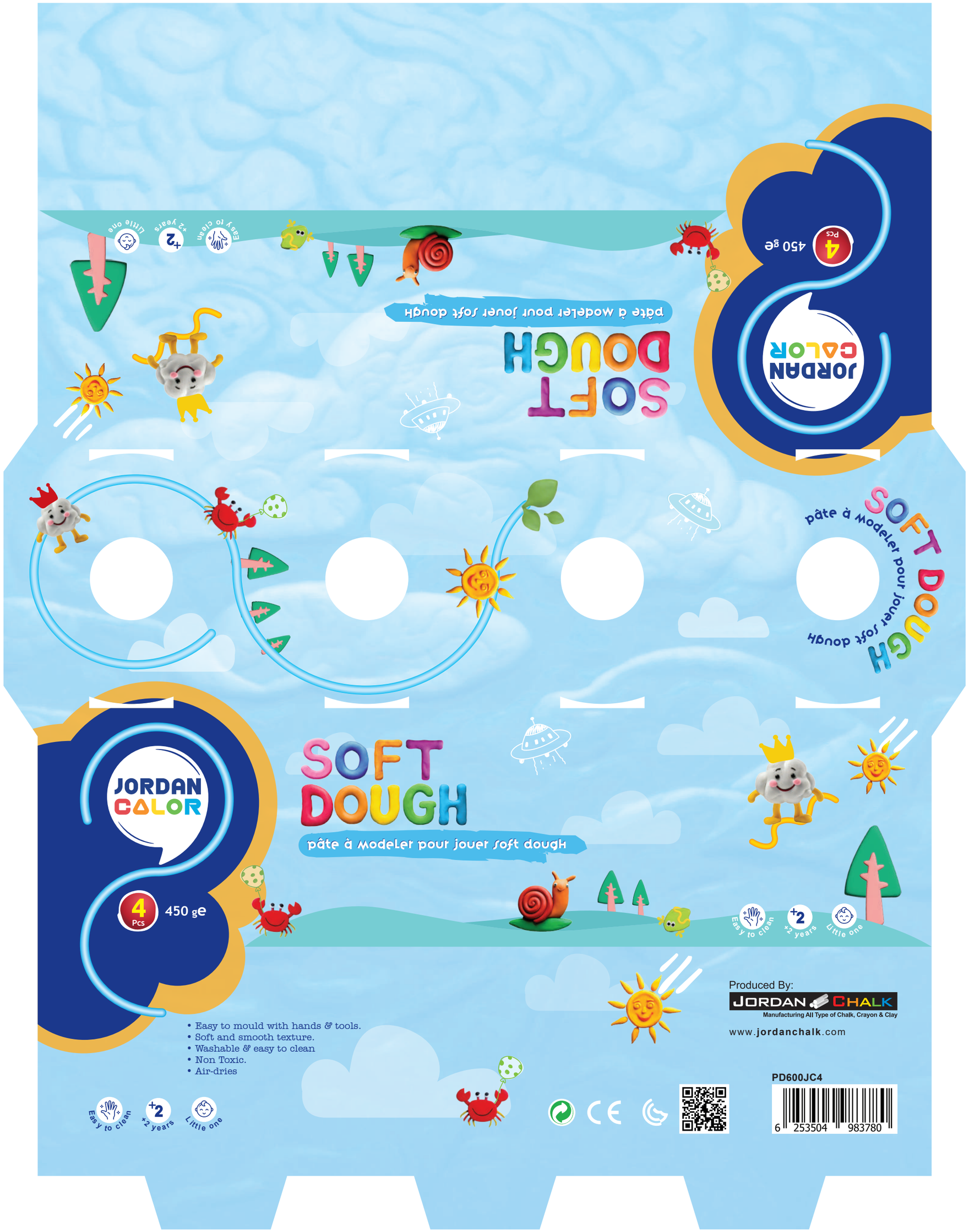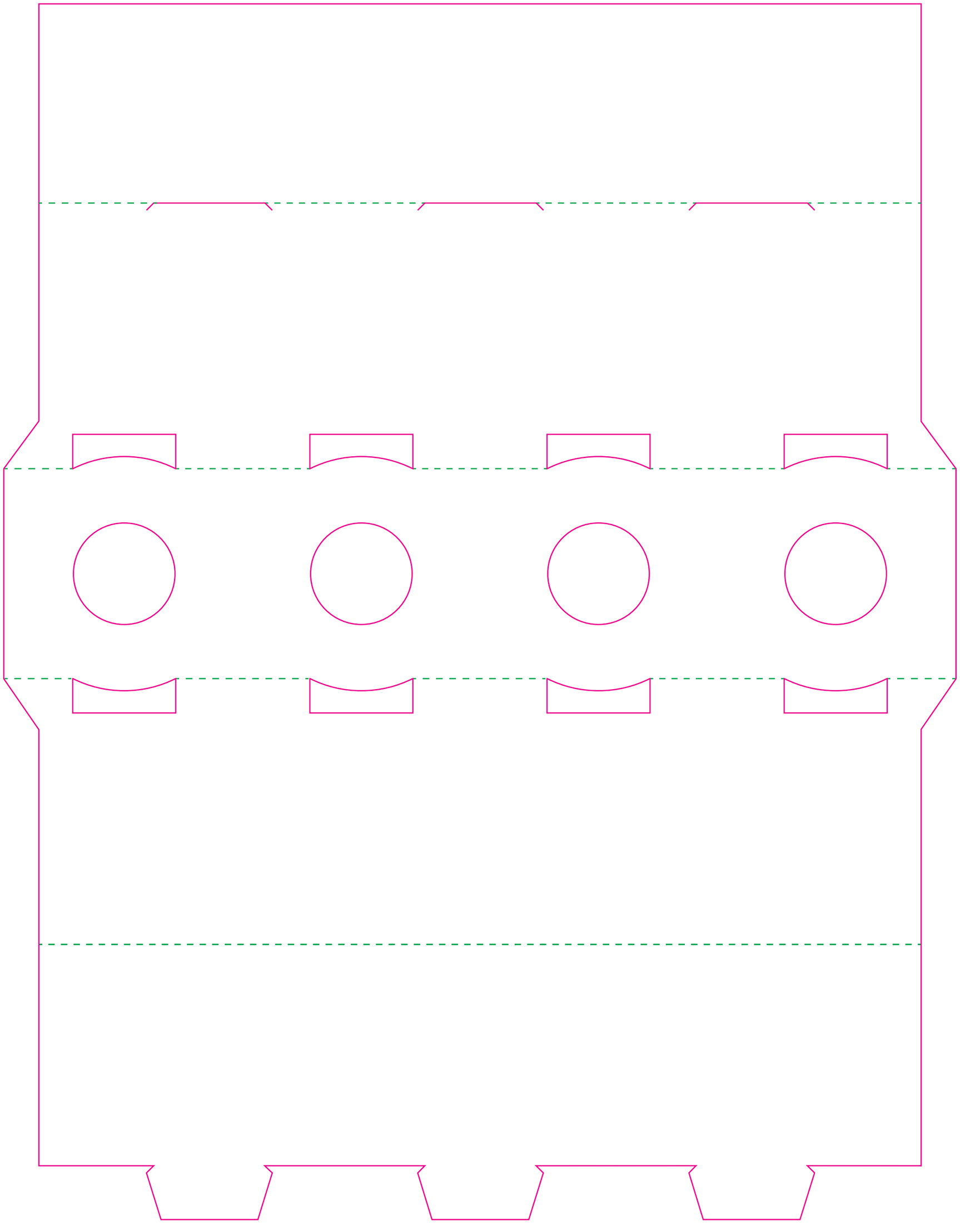
Jar (150gr)