(PD500JC5)

-

Dough 5x100gr in jars 5 colors, in carton box ,500 gr
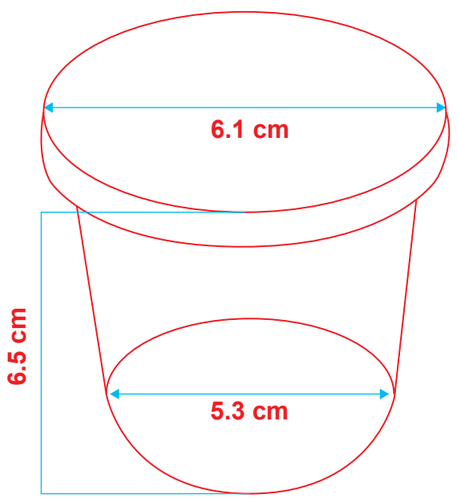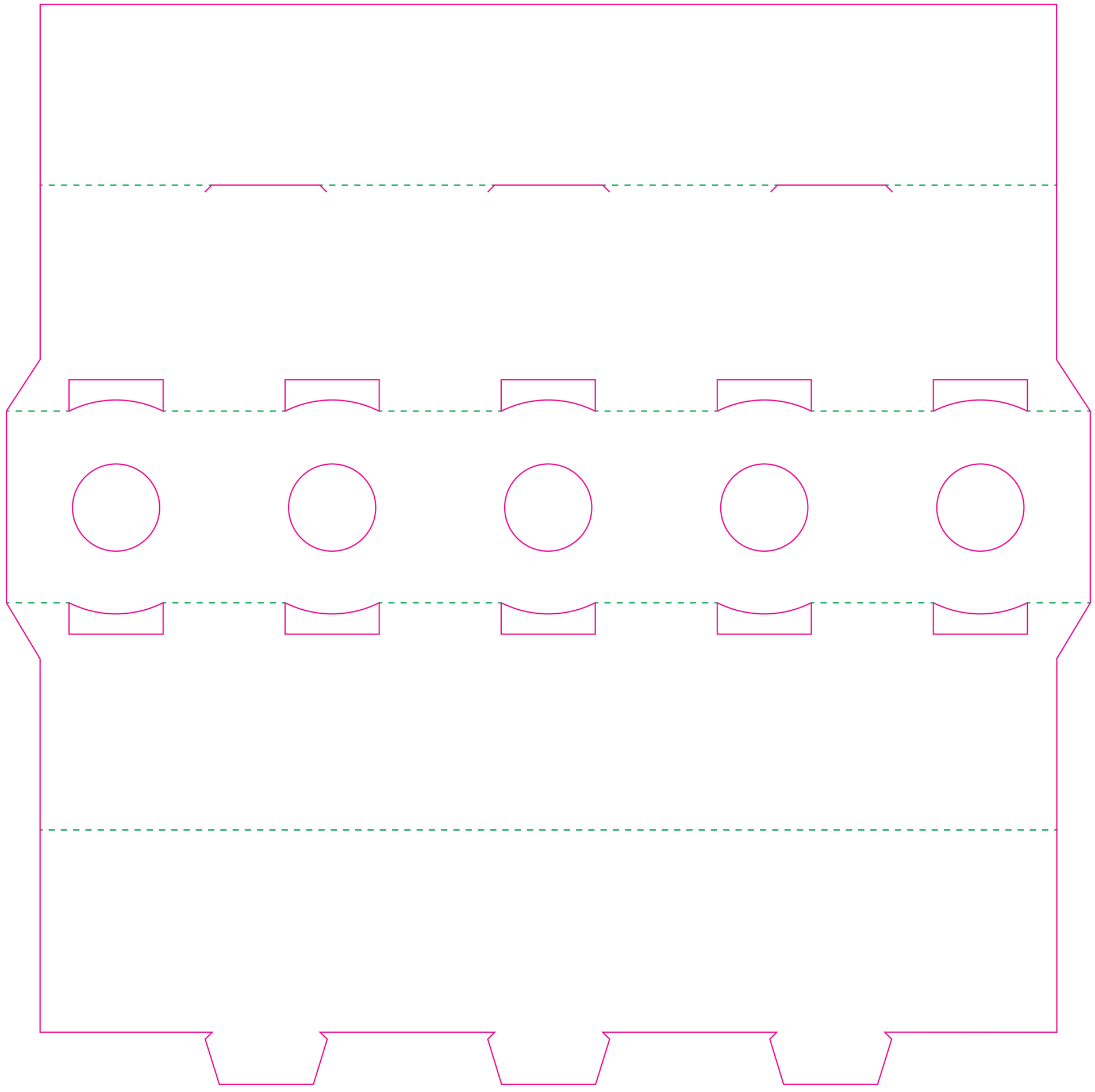
Jar (100g):